TECD30-B: TWIN EAGLES 30" COOLDER DRAWER

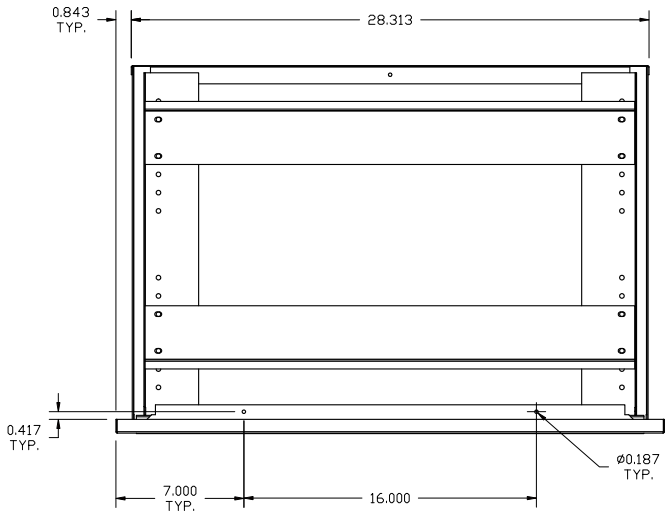

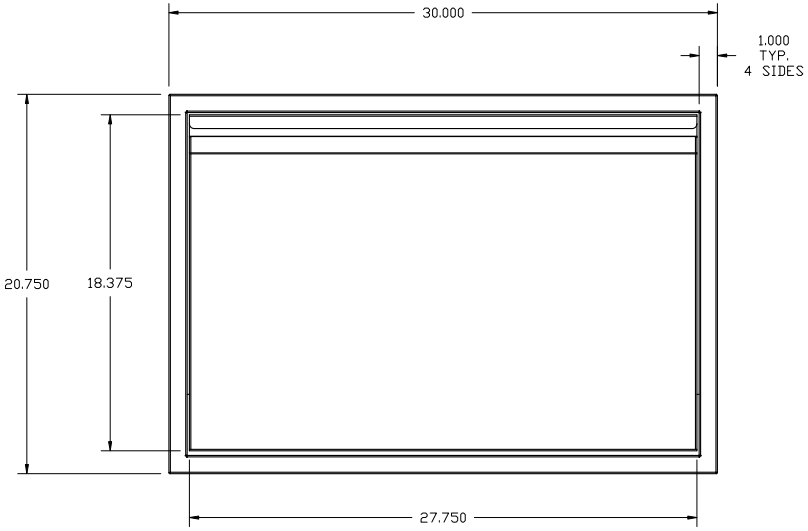

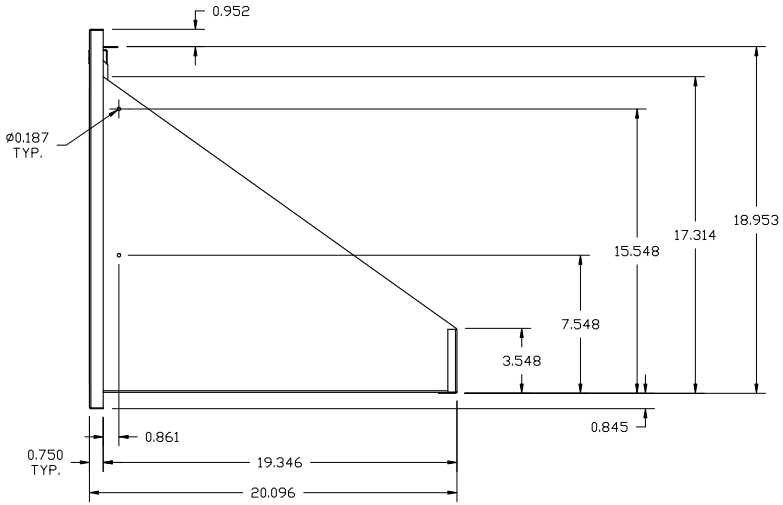

LAST UPDATE: 08/11